V10F/P、V20F/P Series Vane Pump

PIONEER FLURD POWER

Product show and brief introduction

Series 1-13
Size 22
Nominal pressure 17.2 MPa

Model code

F3-	V20	F	-P	13	S	-1	A	8H		22	L
Prefix	Series	Integral valve options	Inlet port connections	Displ.	Oulet port connections	Shafts	Outlet Positions	Integral valves		Design	Rotation
								Orifice No. Flow rate L/min	Relief valve setting MPa		
Omit: Usting antiwear oil water glycol fluid F3: Phoshate ester fluid	V10 V20	F: Flow control & relief P:Priority valve & relief	D : 1 5/16-12 str. Thd. (V20 only) P :1″ NPT thread (V10 only) 1 1/4″ NPT thread (V20 only) S:1 5/16-12 str. thd. (V10 only) 1 5/8″ -12 str. thd. (V20 only) T:1 3/16-12 str. Thd. (V10 only)	1 2 3 4 5 6 7 6 7 8 9 11 12 13	See between	1:Straight keyed 3:Threaded with woodruff key 11:Splined 12:Splined (V10 only) 38:Splined 62:SAE A Spline (V20 only)	(Viewed from cover end of pump) A:Opposite inlet port B:90° CCW from inlet C:In line with inlet D:90° CW from inlet	2—8 3—11 4—15 5—19 6—23 7—27 8—30	A—1.7 B—3.5 C—5.2 D—7 E—8.6 F—10 G—12.1 H—140 J—155 K—175	22	(Viewed from shaft end of pump) L -Left hand for counter-clockwise Omit for right hand.

Oulet port connections

Code	Flow control cover		Priority valve cover		
	Pressure	Tank	Primary outlet	Secondary outlet	Tank
K	—	—	9/16-18 St. thd. (V10P)	3/4-16 St. thd. (V10P)	9/16-18 St. thd. (V10P)
P	3/4-16 St. thd. (V10F & V20F)	1/2″ NPT thd. (V10F & V20F)	—	—	—
S	3/4-16 St. thd. (V10F)	1-1/16—12 St. thd. (V20F)	—	—	—
T	3/4-16 St. thd. (V10F)	3/4-16 St. thd. (V10F)	3/4-16 St. thd. (V20P)	7/8-14 St. thd. (V20P)	3/4-16 St. thd. (V20P)

Technical Data

Model Series	Delivery Usgpm @ 1200 rpm 100 psi	Displ. mL/r	Max r/min	Max MPa	Typical del.. Usgpm @ max. speed & pressure	Typical input HP@ @ max. speed & pressure	Wt. kg
V10F V10P	1	3.3	4800	17.2	3.6	7	4.5-6.8
	2	6.6	4500	17.2	7.3	136	
	3	9.8	4000	17.2	9.4	17.8	
	4	13.1	3400	17.2	10.9	20.4	
	5	16.4	3200	17.2	12.8	22.8	
	6	19.5	3000	15.2	14.6	24.5	
	7	22.8	2800	13.8	16	24	
V20F V20P	6	19.5	3400	17.2	16.1	29	7.3-8.3
	7	22.8	3000	17.2	16.7	29.5	
	8	26.6	2800	17.2	17.7	32.5	
	9	29.7	2800	17.2	19.8	35.5	
	11	36.4	2500	17.2	22.9	37.5	
	12	39	2400	15.2	23	36	
	13	42.5	2400	15.2	25.9	39	

Flow Control Model

V10F& V20F

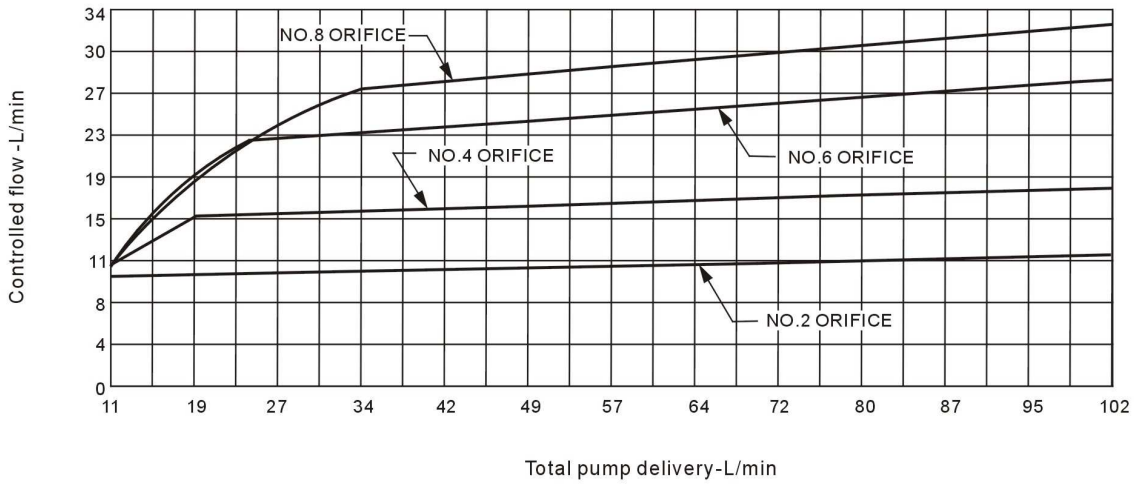

V10P

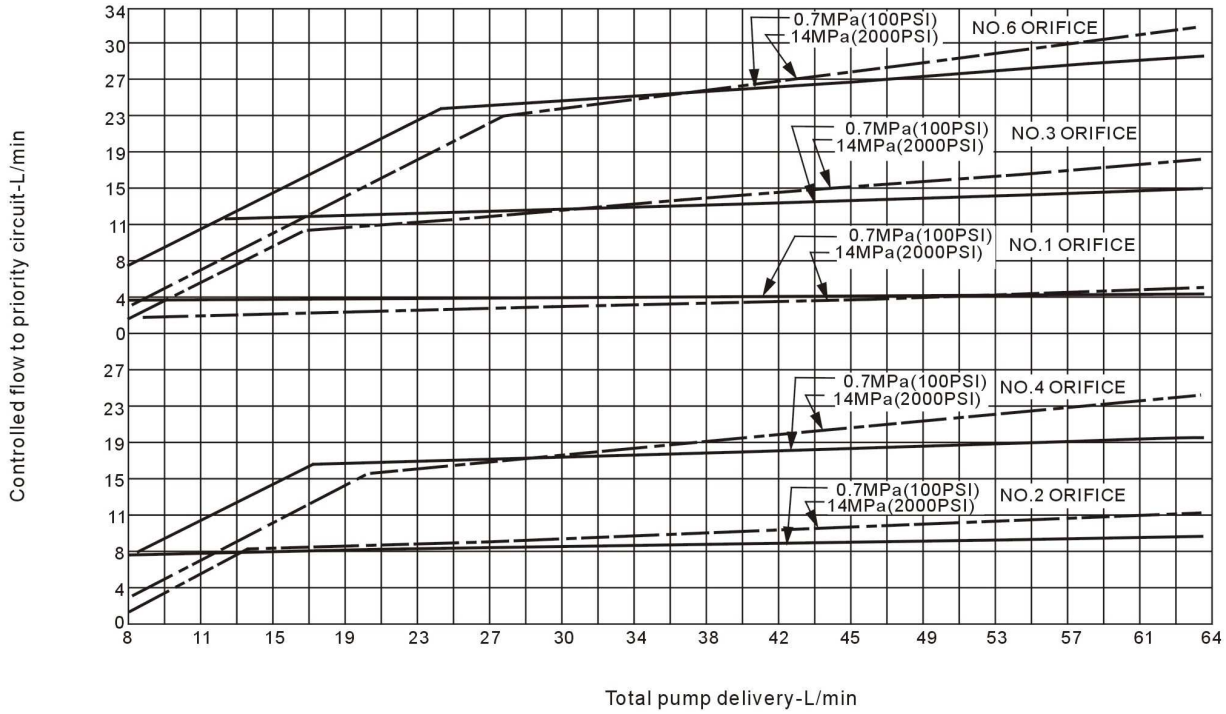
0.7MPa(100PSI)
14MPa(2000PSI)
NO.6 ORIFICE
0.7MPa(100PSI)
14MPa(2000PSI)
NO.3 ORIFICE
0.7MPa(100PSI)
14MPa(2000PSI)
NO.1 ORIFICE
0.7MPa(100PSI)
14MPa(2000PSI)
NO.4 ORIFICE
0.7MPa(100PSI)
14MPa(2000PSI)
NO.2 ORIFICE
Controlled flow to priority circuit-L/min
Total pump delivery-L/min

V20P

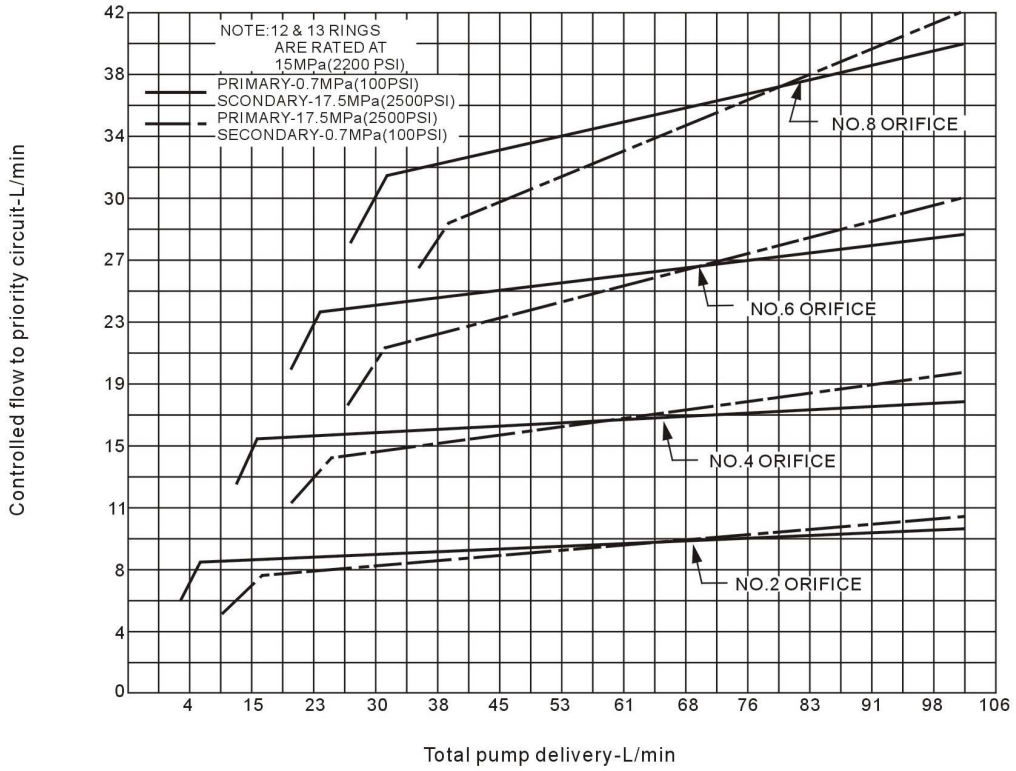
NOTE:12 & 13 RINGS
ARE RATED AT
15MPa(2200 PSI),
PRIMARY-0.7MPa(100PSI)
SCONDARY-17.5MPa(2500PSI)
PRIMARY-17.5MPa(2500PSI)
SECONDARY-0.7MPa(100PSI)
NO.8 ORIFICE
NO.6 ORIFICE
NO.4 ORIFICE
NO.2 ORIFICE
Controlled flow to priority circuit-L/min
Total pump delivery-L/min

V10F Series

Shaft options shown on page 6

Ring size	Dimensions	
	A	B
1	128.8	109.5
2	128.8	109.5
3	128.8	109.5
4	135.1	115.8
5	135.1	115.8
6	140.2	120.9
7	140.2	120.9

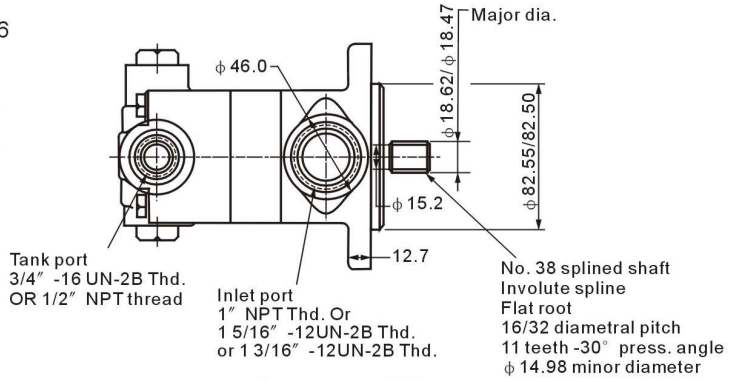

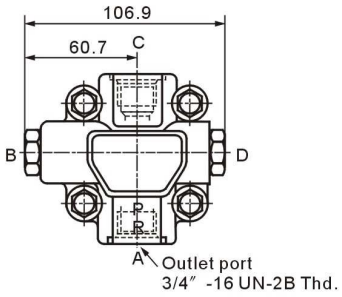

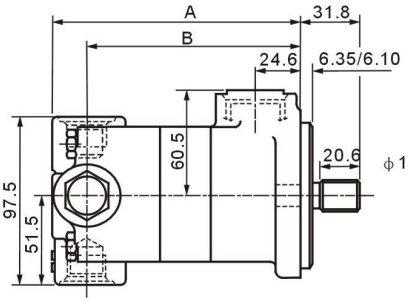

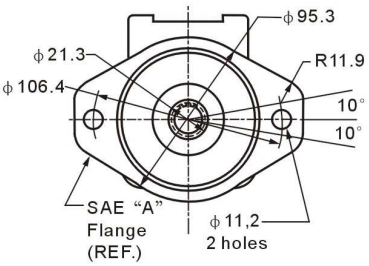

V10P Series

Shaft options shown on page 6

Ring size	Dimensions	
	A	B
1	130.0	109.5
2	130.0	109.5
3	130.0	109.5
4	136.4	115.8
5	136.4	115.8
6	141.5	120.9
7	141.5	120.9

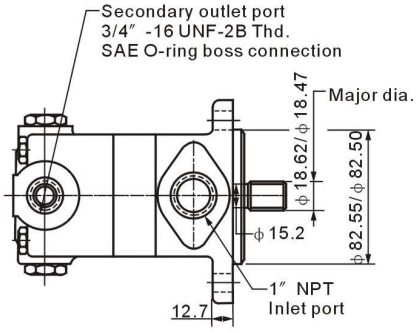

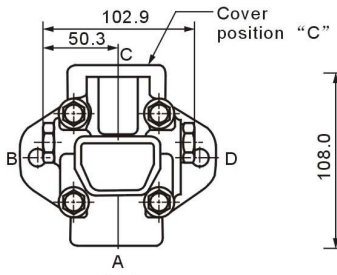

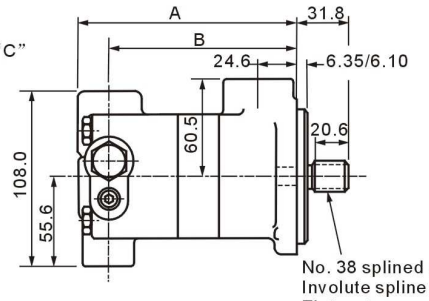

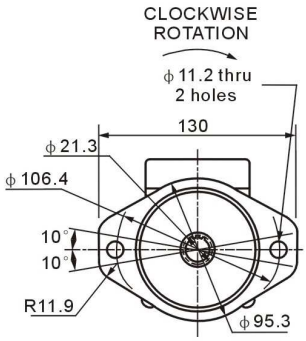

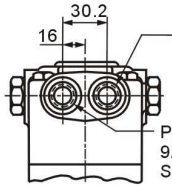

Tank port for pressure relief
Of primary outlet port
9/16″ -18 UNF-2B Thd.
SAE O-ring boss connection

Primary outlet port
9/16″ -18 UNF-2B Thd.
SAE O-ring connection

No. 38 splined shaft
Involute spline
Flat root
16/32 diametral pitch
11 teeth - 30° press. angle
ϕ14.98 minor diameter

V20F & V20P Series

Shaft options shown on page 6

Ring size	Dimensions	
	A	B
6	149.6	125.7
7	156.0	132.1
8	156.0	132.1
9	156.0	132.1
11	161.0	136.9
12	164.3	140.5
13	164.3	140.5

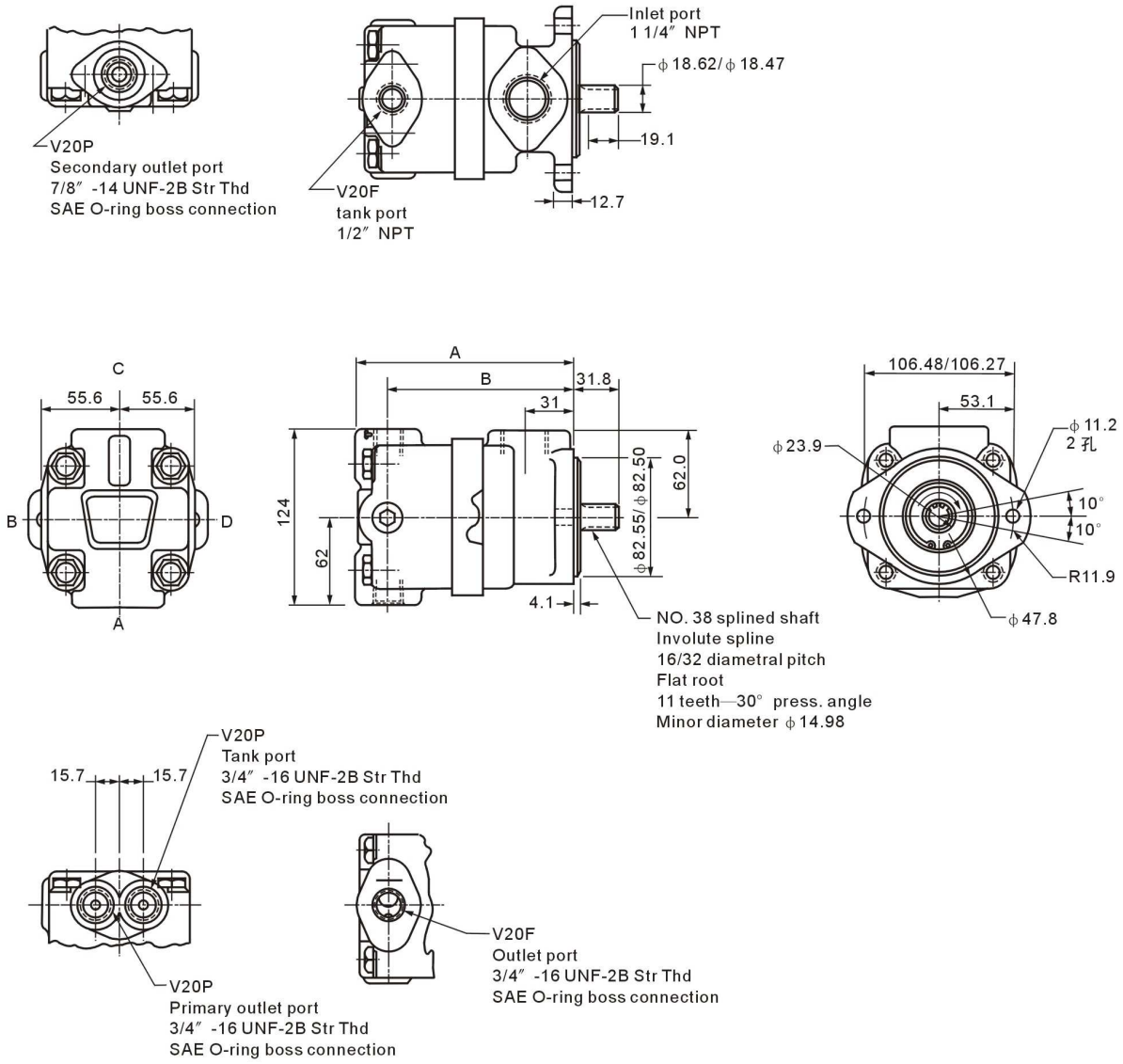

V10 Series

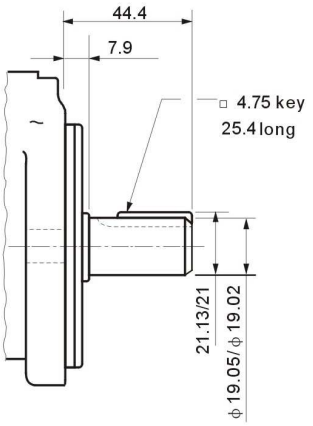

No. 1 shaft extension

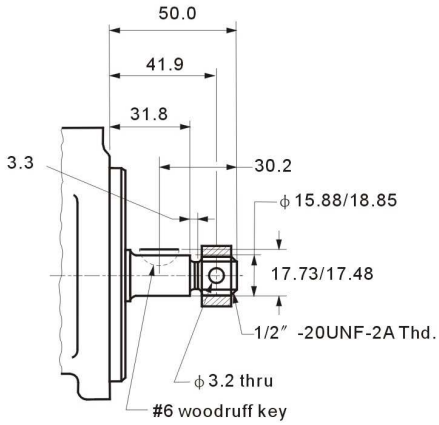

No. 3 shaft extension

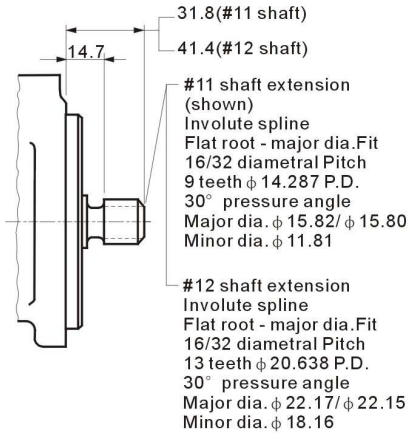

No. 11 & 12 shaft extension

V20 Series

Note: NO.62 splined shaft same as V10 #11 shaft shown above.

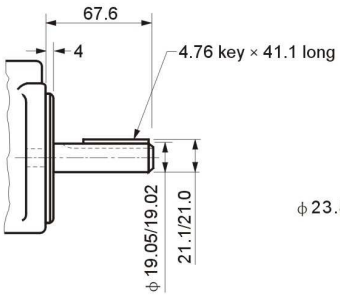

No. 1 shaft extension

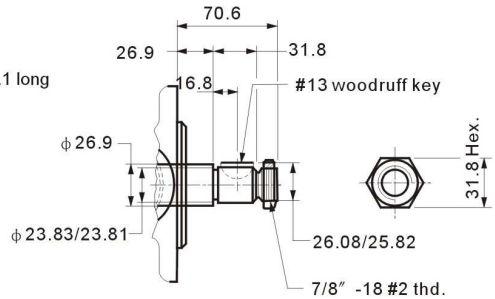

No. 3 shaft extension

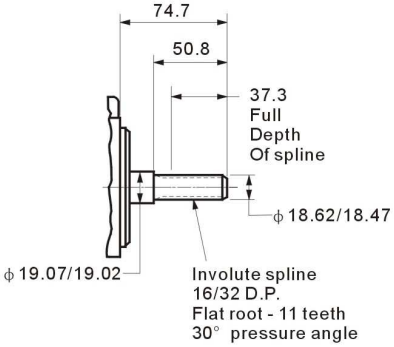

No. 11 shaft extension